Magazine loading system with magazine buffer and automatic magazine change **VEGO** Dynamic

VEGO AMS 07



Description
The line unloader AMS 07 provides an automatic magazine exchange for continnous loading into a magazine. The unit consists of two loading and two unloading conveyors for magazines, two independent lifting axles with magazine platforms, a transfer conveyor with shuttle mechanism to the previous unit and an electrically driven pusher. The unloading conveyors are situated parallel to each other on the lower level and the loading conveyors are situated directly above.

The magazines are transported over the loading conveyor and clamped in place. The pusher then slides the PCB's into the magazine. The full magazine is then transported over the lower (unloading) conveyor and stored until manual removal.

Features
_ Automatic magazine change with magazine clamps at the top and the bottom
_ Loading conveyors situated parallel to each other on the upper level, unloading conveyors situated directly below
_ Minimal floor space required through optimal positioning of the transport conveyors
_ Double track loading using a shuttle mechanism
_ Cycle time < 12 sec

Options
_ Transport height 950 mm ± 50 mm
_ Automatic width adjustment
_ Duallane version
_ Good/bad sorting
_ Electrical width adjustment

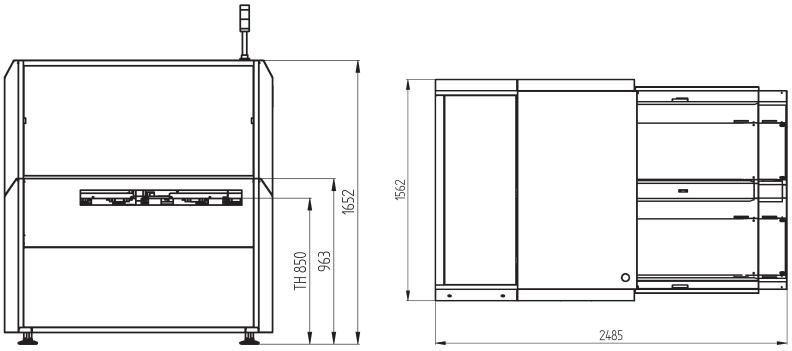

VEGO AMS 07

Machine Configuration	
Transport height	850 mm ± 50 mm
Max. transport width	460 mm
Interface	SMEMA, Siemens
Transfer direction	from left to right
Operating side	Front of the machine
Fixed rail	Front of the machine
Magazine Size	
Magazine length	535 mm
Magazine width	530 mm
Magazine heigth	568 mm
Slot spacing	5- 20 mm
Buffer spacing	1- 50 Slots
Magazine buffer input conveyor	2x3 (2x4) [b]
Magazine buffer output conveyor	2x3 (2x4) [b]
Single magazine weight	max. 30 kg
Panel Dimensions	
Panel length	70 to 460 mm [c]
Panel width	50 to 460 mm
Panel thickness	0.5 to 4.5 mm
Component clearance	± 40 mm
Panel weight	to 3 kg
Installation Requirements	
Power supply	230 V / 115 V, 50 / 60 Hz, ± 10%
Power supply system	L1 + N + PE
Power consumption	0,75 kW
Air supply	6 bar
Air consumption	10 Nl/min
Machine Description	
Length x Width x Height [a]	2485 x 1562 x 1652 mm
Netto weight	570 kg
Noise Level	< 75 dB
Upgrades	
Machine networking via IC Net	

a) other dimensions on request
b) depending on the magazine size
c) Optional 510 mm with monitoring

ASYS GROUP

ASYS Automatisierungssysteme GmbH
Benzstrasse 10,
89160 Dornstadt, Germany
Tel (+49) 7348 9855 0
Fax (+49) 7348 9855 91
info@asys.de

For more information visit
www.asys-group.com

Subject to change without notice.
Some general descriptions and performance characteristics may not be applicable to all products. Technical specifications are subject to change without notice. Only features and technical data provided in purchasing contract are legally binding.

Printed in Germany