Magazine loading/unloading system with magazine buffer and automatic magazine change **VEGO** Dynamic

VEGO AMS 06



Description
The unit consists of two loading/unloading conveyors formagazines, a lifting axle with a magazine platform a transferconveyor to the following unit and an electrically driven pusher. The magazine buffer conveyors are situated parallel to each other and above each other.

The magazines are transported over a loading conveyor to the magazine platform,clamped and then processed. The empty magazines are thentransferred over the unloading conveyor and stored untilmanual removal.

Features
_ Automatic magazine change with clamps at the top and the bottom
_ Loading/unloading conveyors parallel to each other and above each other
_ Minimal floor space required through optimal positioning of the transport conveyors
_ Double lift axle model

Options
_ Magazine adaptation
_ Electric width adjustment
_ Automatic width adjustment
_ Multiple insertion

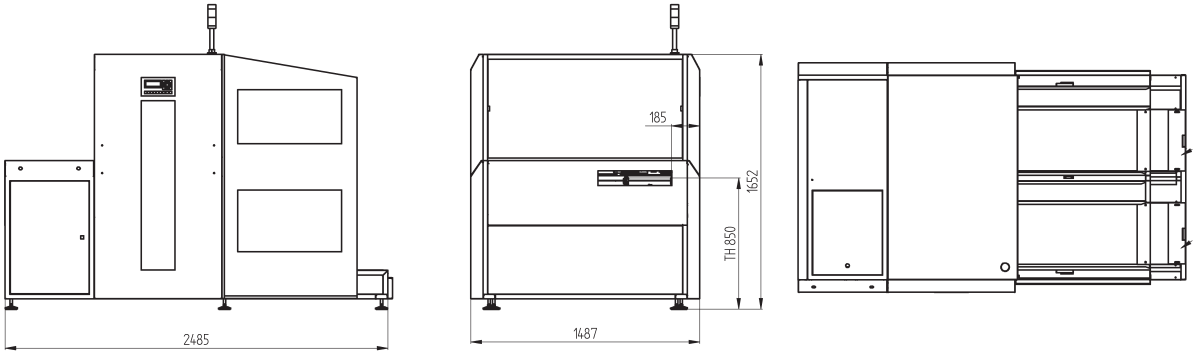

VEGO AMS 06

Machine Configuration	
Transport height	850 mm ± 50 mm
Max. transport width	460 mm
Interface	SMEMA, Siemens
Transfer direction	from left to right
Operating side	Front of the machine
Fixed rail	Front of the machine
Magazine Size	
Magazine length	410 mm
Magazine width	535 mm
Magazine heigth	568 mm
Slot spacing	5- 20 mm
Buffer spacing	1- 50 Slots
Magazine buffer input conveyor	5 (7)[b]
Magazine buffer output conveyor	5 (7)[b]
Panel Dimensions	
Panel length	70 to 460 mm
Panel width	50 to 460 mm
Panel thickness	0.8 to 4.5 mm
Component clearance	± 40 mm
Panel weight	to 3 kg
Installation Requirements	
Power supply	230 V / 115 V, 50 / 60 Hz, ± 10%
Power supply system	L1 + N + PE
Power consumption	0,75 kW
Air supply	6 bar
Air consumption	10 Nl/min
Machine Description	
Length x Width x Height [a)]	1880 x 1490 x 1650 mm
Netto weight	< 670 kg
Noise Level	< 75 dB
Upgrades	
Machine networking via IC Net	

a) other dimensions on request
b) depending on the magazine size

ASYS GROUP

ASYS Automatisierungssysteme GmbH
Benzstrasse 10,
89160 Dornstadt, Germany
Tel (+49) 7348 9855 0
Fax (+49) 7348 9855 91
info@asys.de

For more information visit
www.asys-group.com

Subject to change without notice.
Some general descriptions and performance characteristics may not be applicable to all products. Technical specifications are subject to change without notice. Only features and technical data provided in purchasing contract are legally binding.

Printed in Germany