ASYS GROUP

ASYS Automation Systems

VEGO Dynamic AES 03D & AMS 03D



AES 03D: Automatic Line- Loader for magazine

› Loading station for 2 PCB – magazines (optionally 3 or 4)

› Magazine movement by vertical axis only

› Magazine unloading by puller mechanism, mounted on shuttle unit

› Lifting table with quick clamping system for the magazines, with vertical fixation

› Cycle time per PCB 11 - 15 sec.

› Magazine exchange during run-mode allows a non-stop production

› Excellent accessibility of the magazines

› Small or wide design

› smallest footprint

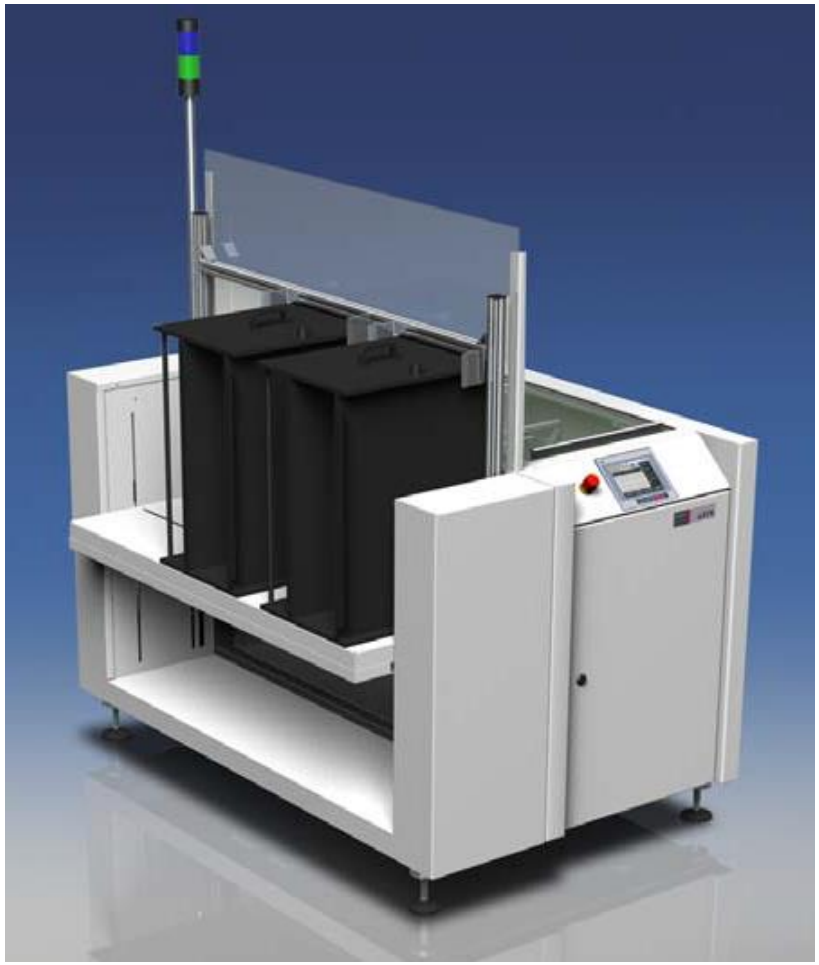

Technical Specification

	Type 1	Type 2	XL	S- XL
Lenth / mm	1050	1170 (1050 (1))	1170 (1050) (1)	1320
Width / mm	1060	1470	1930	1930
Height / mm	1500	1500	1500	1500
PCB- length / mm	70 - 420	70 - 460 (510) (2)	70 - 460 (510) (2)	70 - 560 (610) (2)
PCB- width / mm	50 - 260	50 - 460	50 - 690 (460/260) (3)	50 - 690 (460) (3)
Magazine format L x W x H / mm	420 x 320 x 568	540 x 530 x 568	540 x 765 x 568	540 x 765 x 568
Number of magazines	2	2	2	2
No. of magazines optionally		3 (420 x 320 x 568)	3 (540 x 530 x 568)	3 (540 x 530 x 568)
			4 (420 x 320 x 568)	

(1) Either at magazine length 420mm
(2) Depending on puller type
(3) By the use of 3 or 4 magazines

Process

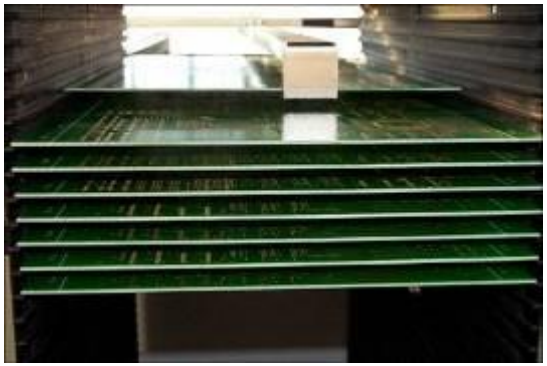

Step 1

Puller moves into the magazine, lifting axis moves upwards, puller takes PCB out of the magazine

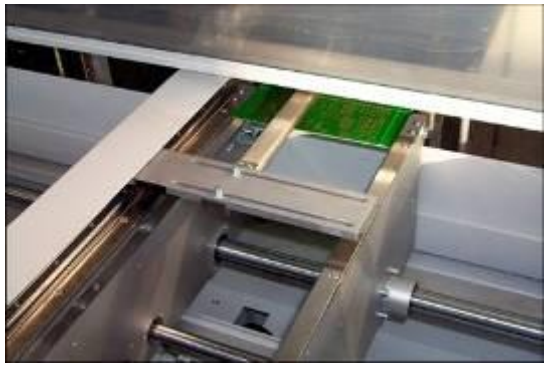

Step 2

PCB is pulled on the conveyor and transported to the conveyor end

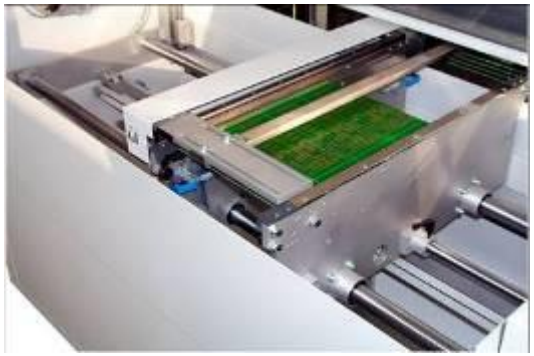

Step 3

Shuttle moves sideways to the handover position

Functionality

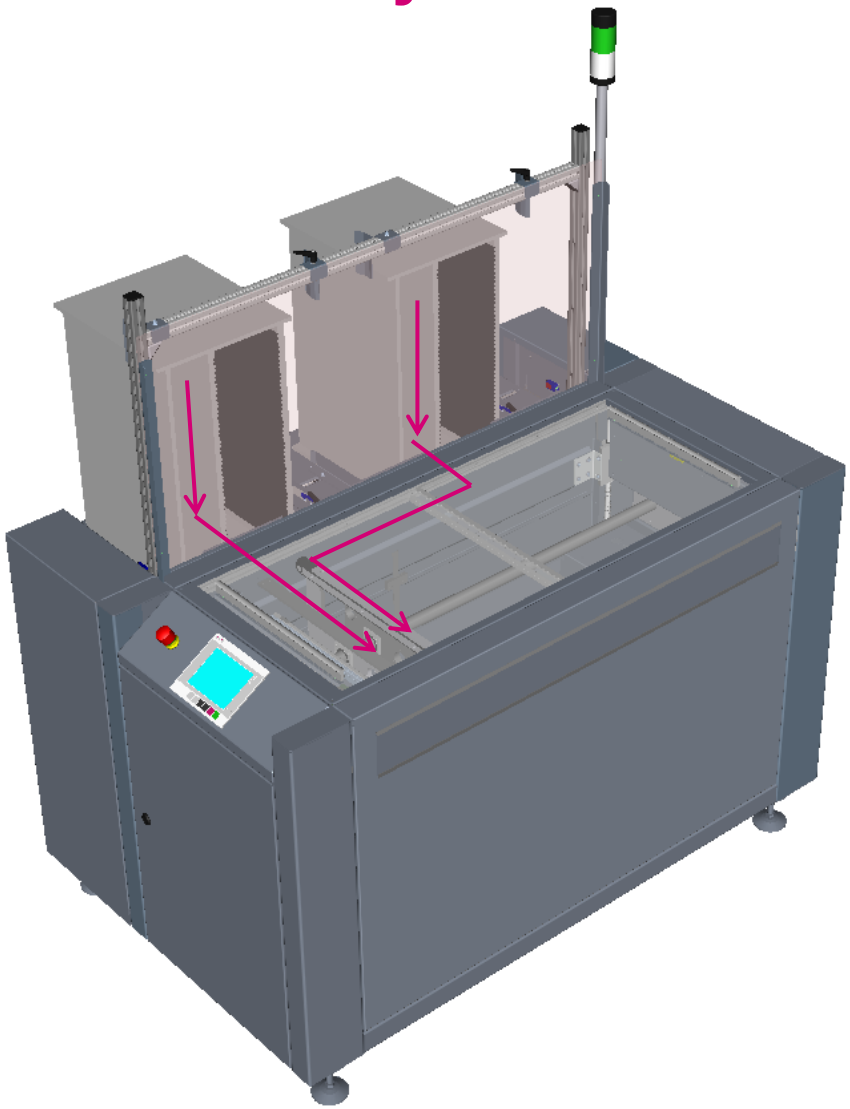

› Unloading the magazines by starting from the top
Optionally: Unloading from the bottom

› Magazine positions and handover position is freely programmable

› Product memory function for 200 recipes

› Magazine memory for 5 different magazines

› Graphical color display with touch- function

› Operator guidance on 4 levels

Magazine table

› Magazine fixation on top and bottom by clamping lever, for tool-free adaption of different magazine sizes

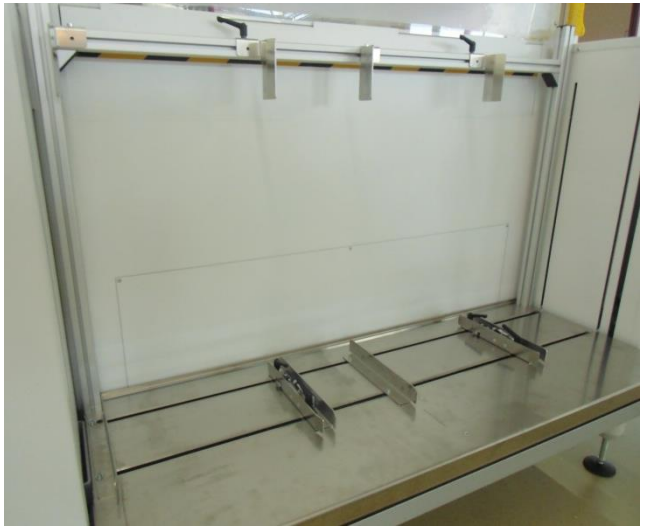

Magazine clamp-mechanism on bottom with sensor detection.

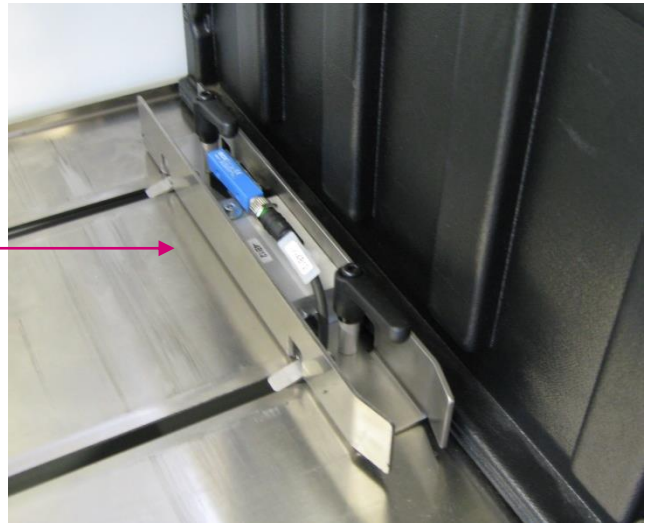

Magazine guiding on top.

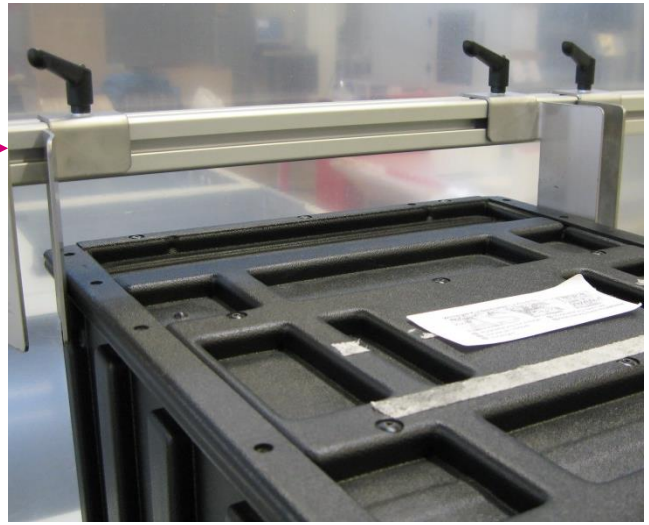

Shuttle

› Servo- Drive for fast and exact positioning

› Easy programming of the magazine- and handover positions by Teach- In

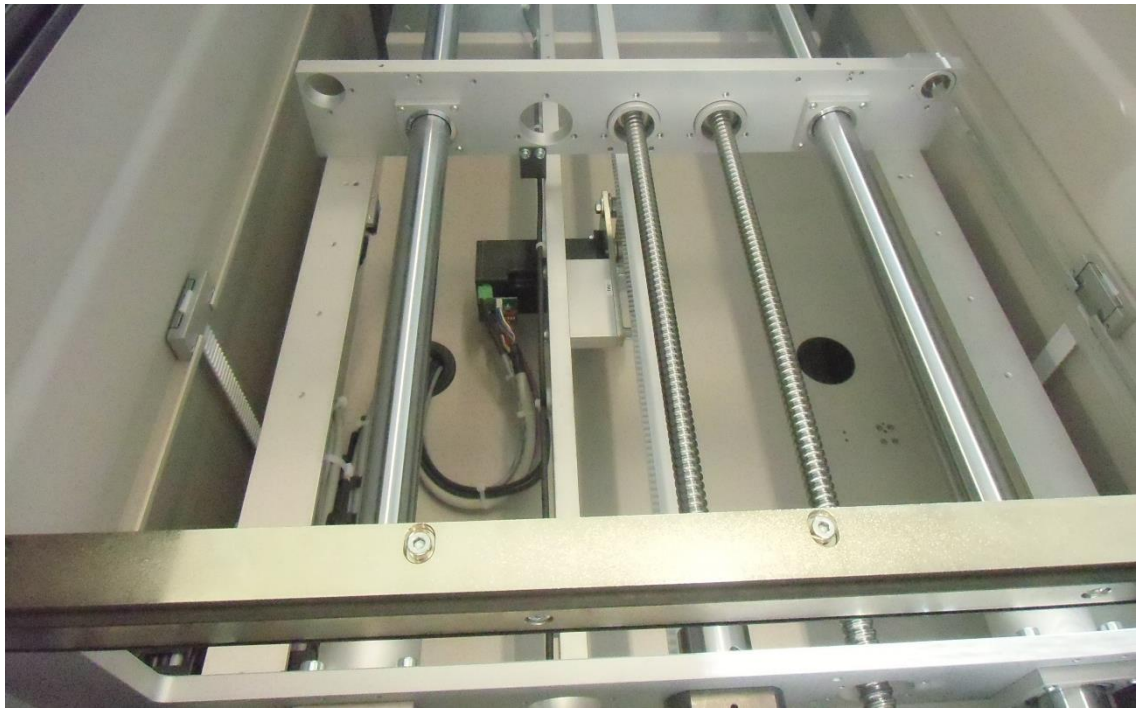

Puller

› Motorized puller with adjustable electronic force limiter

› Designed for component height +12,5/-40mm or either +25/-40mm

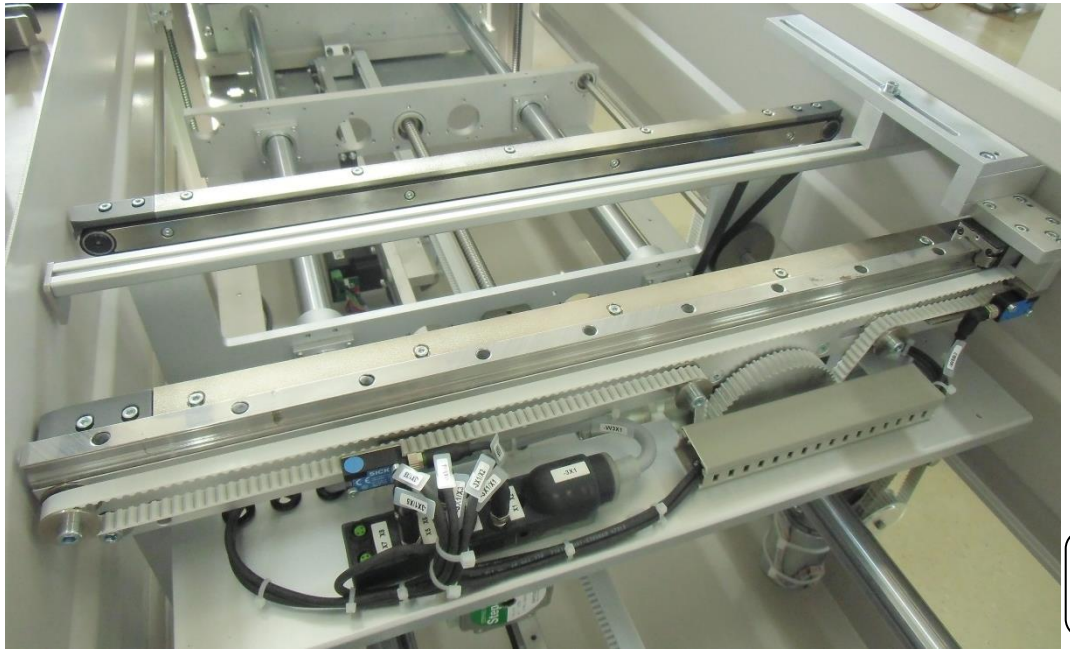

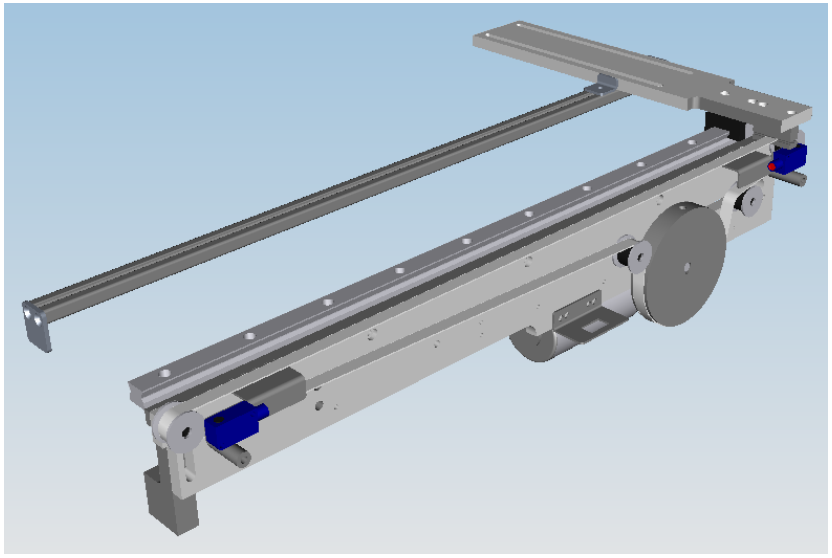

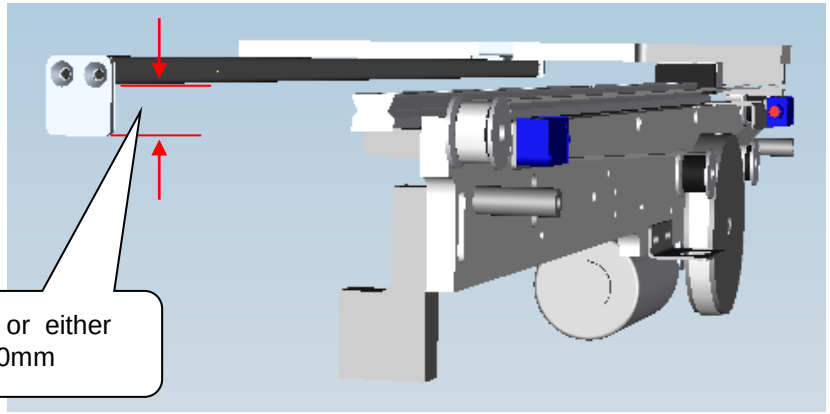

Width adjusting

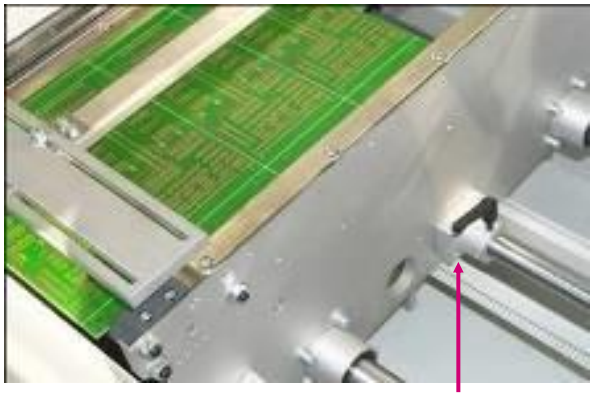

Manual adjustment of the transport width by clamping lever

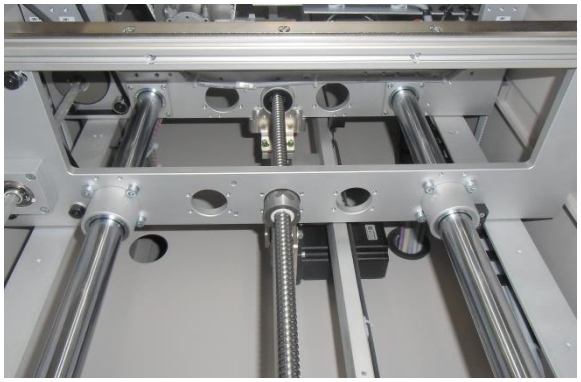

Option: Electrical width adjustment

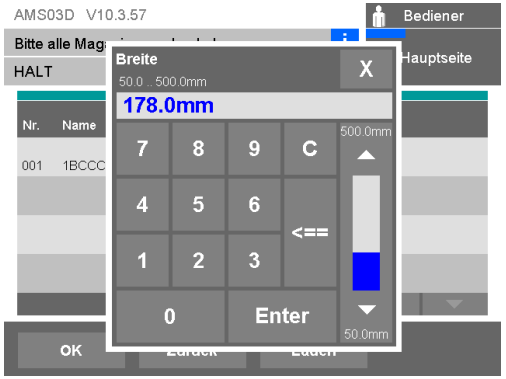

Option: Automatic width adjustment

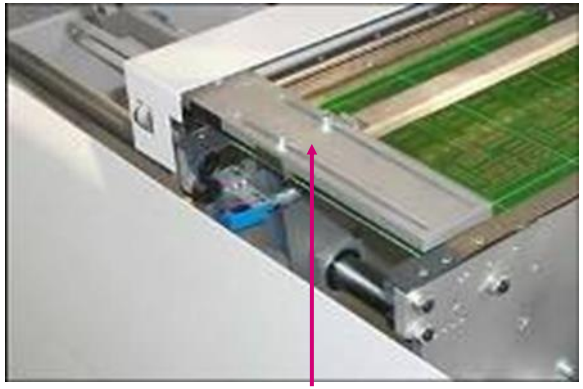

Puller adjustable for different PCB- widths

Safety

› Emergency- stop button

› Sliding cover from both sides with contact-free safety switches (Interlock)

› Safety push- cover on lifting table with quick stop function



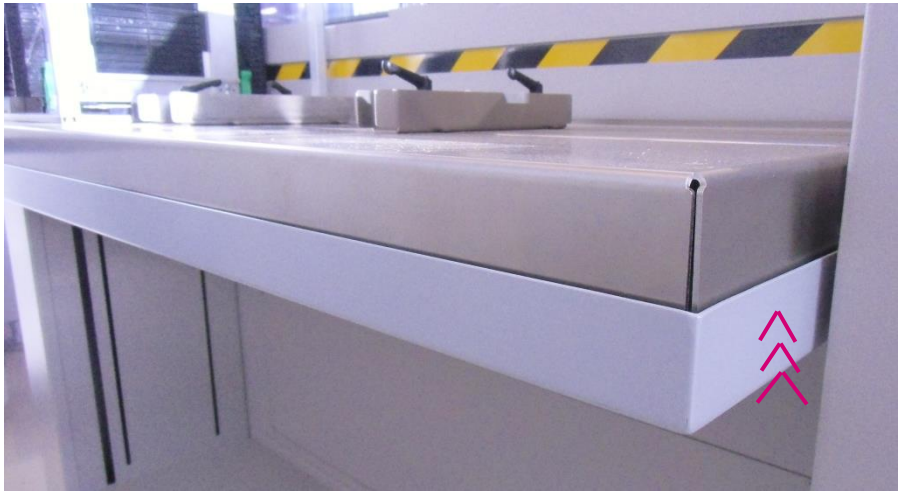

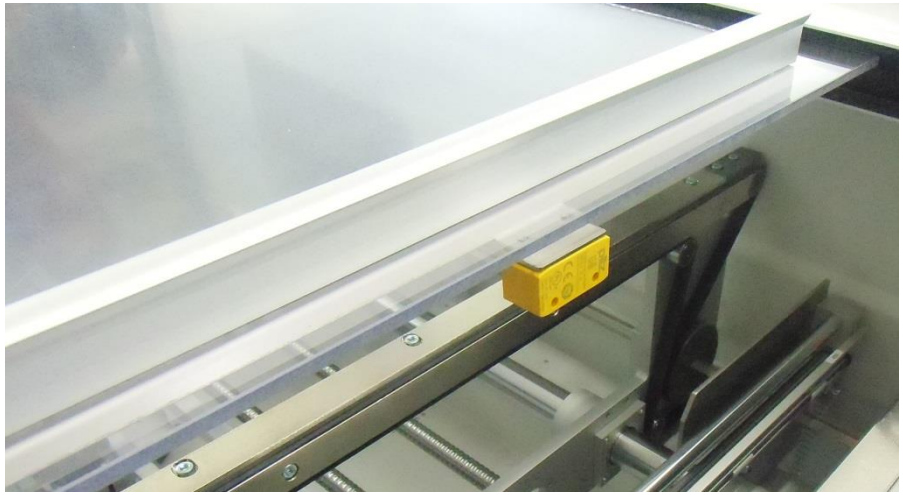

Grip- protection (shutter)



Grip- protection between magazine table and shutter closes before shuttle movement.





Grip- protection between shuttle and downline machine closes before shuttle movement.

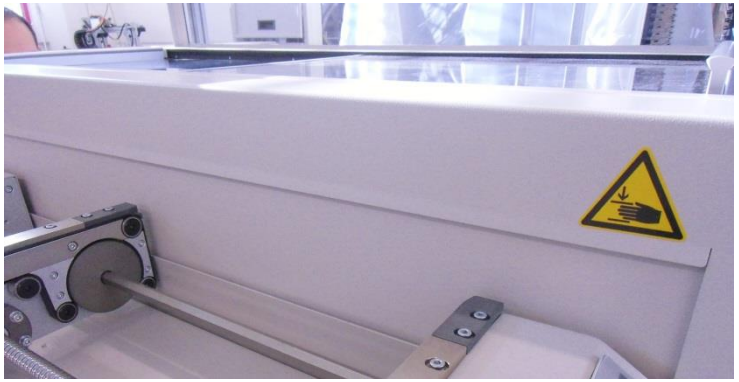

Frame

› Robust steel frame

› Completely ESD powder coated

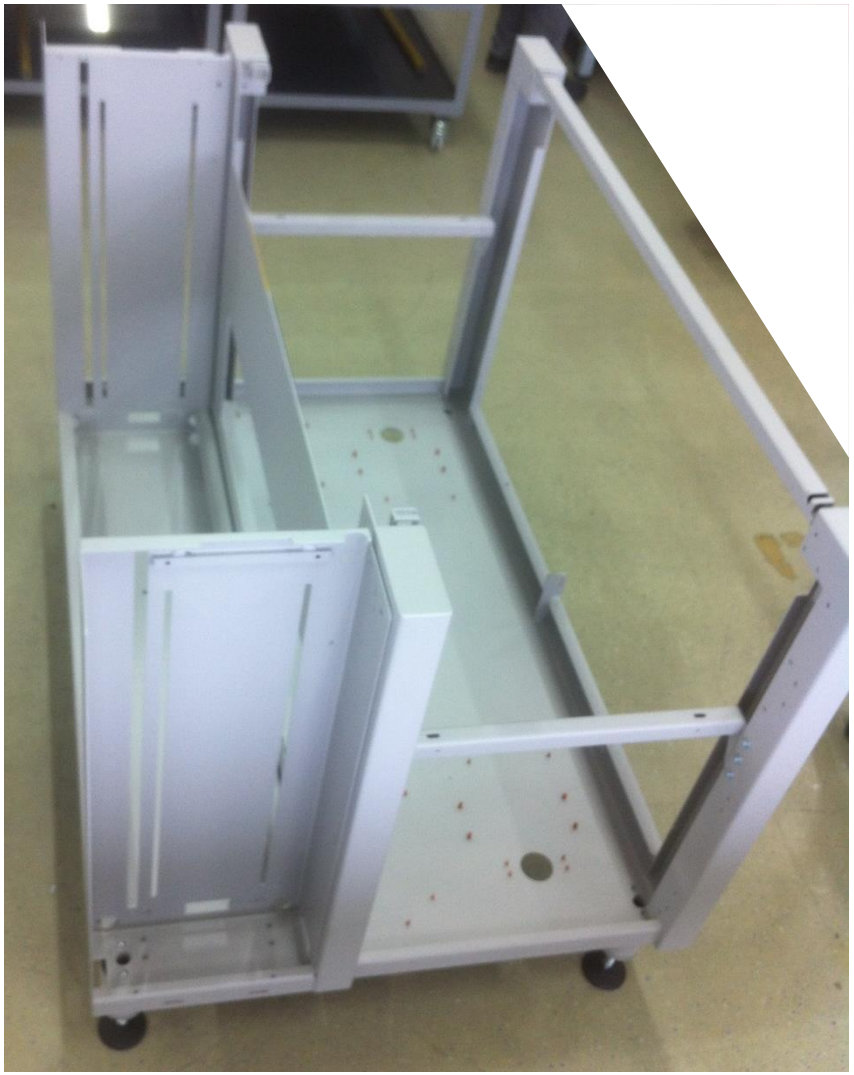

Electric

› Electrical cabinet with flap door with double-bit lock

› Main switch usable as emergency stop





Electrical cabinet

Sensing

› High- quality photoelectric proximity switch with „multiline“ light beam for safe detection of PCB’s with holes or cutouts.

› Additional sensors for “gap control” to monitor the transition gap between magazine and shuttle and between shuttle and downline machine.

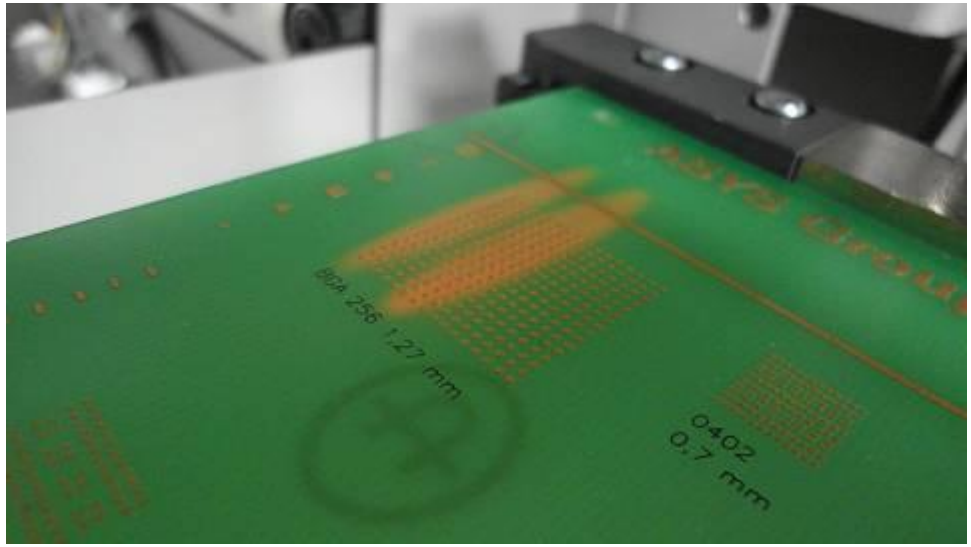

PCB detection

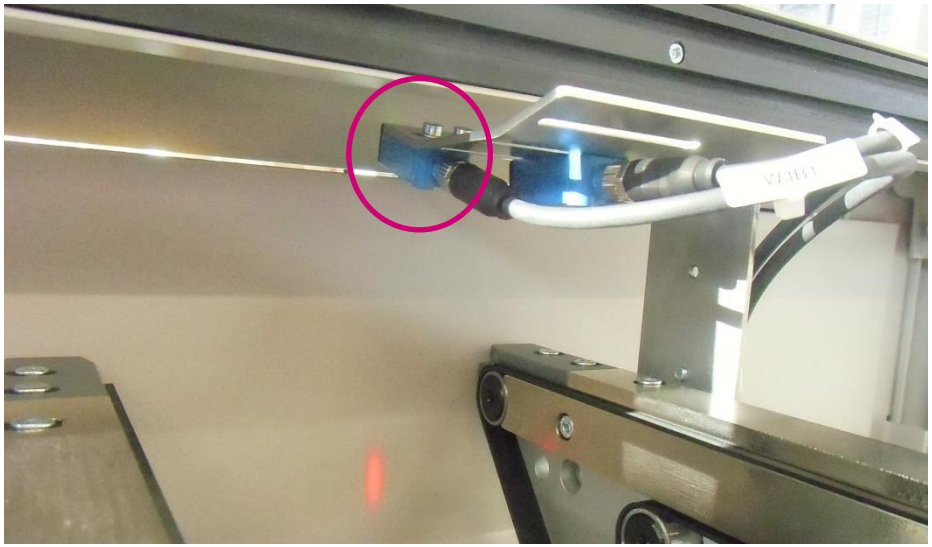

Gap control sensor

Option: Work on 3 magazines

› Usage of 3 magazines instead of 2

› Additional clamp mechanism

› Additional programmable magazine position

› Only for type 2 or XL



Type XL for 3 magazines

Option: Retraction unit (Combi- mode)

› The PCB is taken out of the magazine by a puller and handed over to the downline machine.

› After processing the PCB it will be moved back and pushed into the magazine.

› Puller with turnable finger from top
Bi-directional conveyor function
Additional pusher

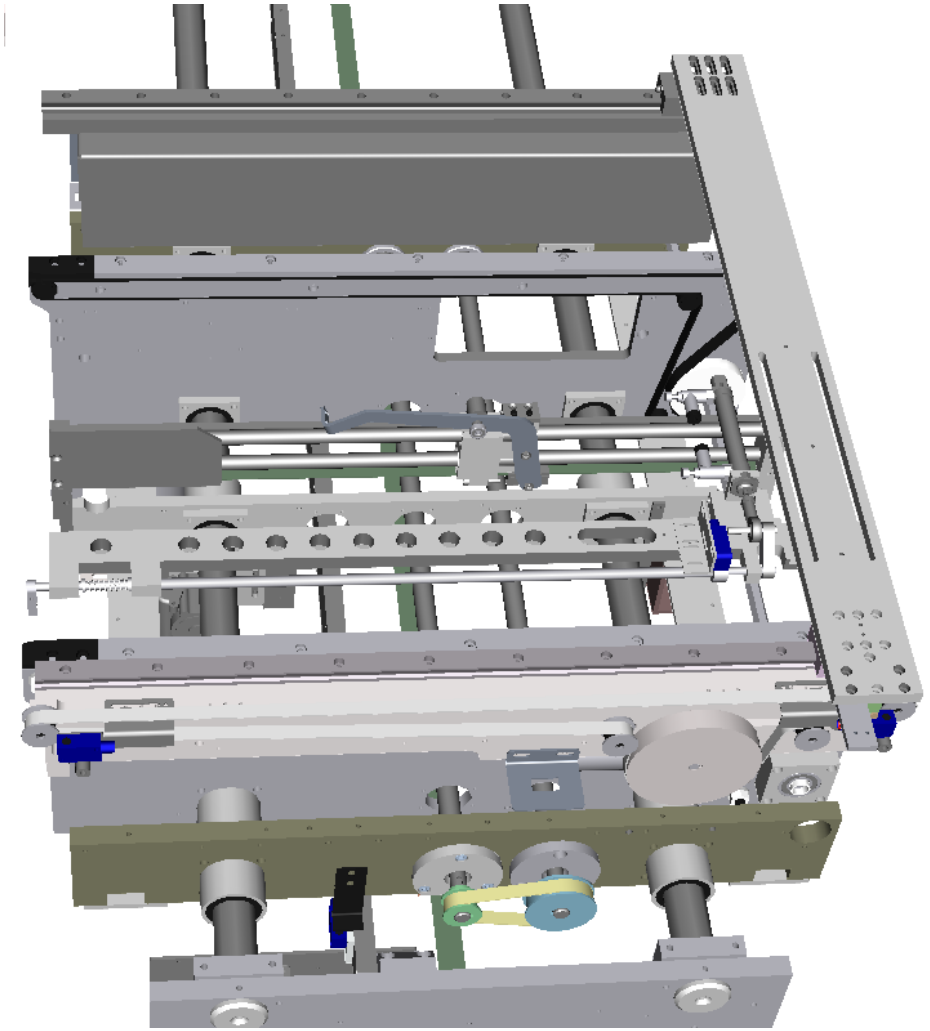

Option: Puller variations from the top

› Magazine unloading from top to bottom

› For very low component height, but using all magazine slots



› For high components on top- side of PCB

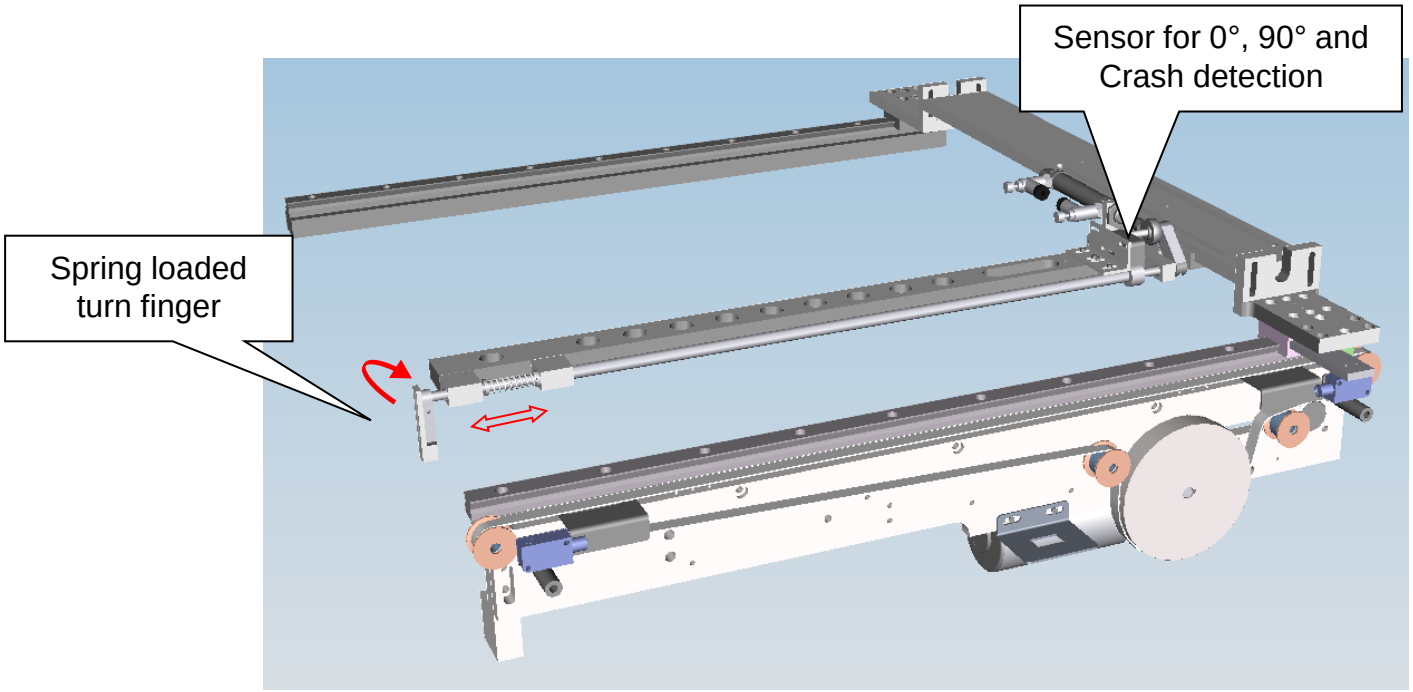

Option: Puller variations from the bottom

› Magazine unloading from bottom to top

› Standard puller from the bottom with fix mounted finger. Designed for component height +40/-12,5mm or either +40/-25mm

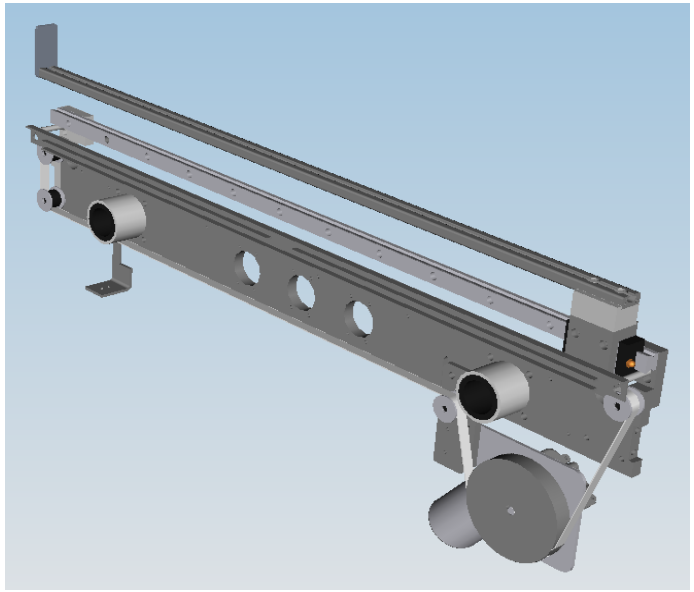

› For high components on bottom side of PCB

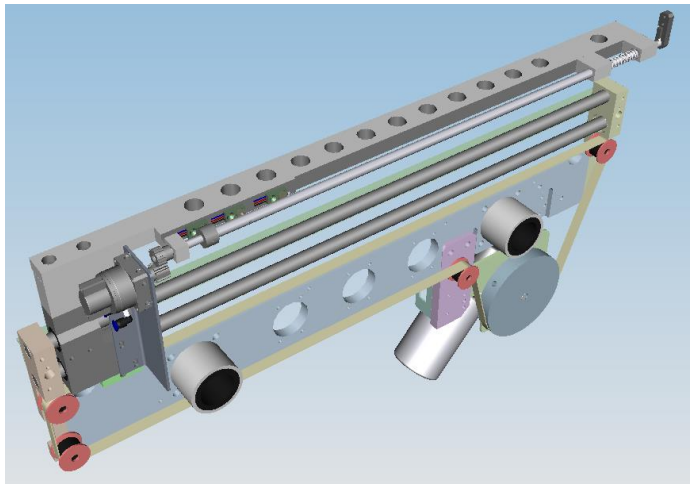

AMS 03D: Automatic Line- Unloader for magazine

› Unloading station for 2 PCB magazines (optionally 3 or 4)

› Magazine movement by vertical axis only

› Magazine loading by pusher mechanism, mounted on shuttle unit

› Lifting table with quick clamping system for the magazines, with vertical fixation

› Cycle time per PCB 11 - 15 sec.

› Magazine exchange during run-mode allows a non-stop production

› Excellent accessibility of the magazines

› Small or wide design

› smallest footprint



Technical Specification

	Type 1	Type 2	XL	S- XL
Lenth / mm	1050	1170 (1050 (1))	1170 (1050) (1)	1320
Width / mm	1060	1470	1930	1930
Height / mm	1500	1500	1500	1500
PCB- length / mm	70 - 420	70 - 460 (510) (2)	70 - 460 (510) (2)	70 - 560 (610) (2)
PCB- width / mm	50 - 260	50 - 460	50 - 690 (460/260) (3)	50 - 690 (460) (3)
Magazine format L x W x H / mm	420 x 320 x 568	540 x 530 x 568	540 x 765 x 568	540 x 765 x 568
Number of magazines	2	2	2	2
No. of magazines optionally		3 (420 x 320 x 568)	3 (540 x 530 x 568)	3 (540 x 530 x 568)
			4 (420 x 320 x 568)	

(1) Either at magazine length 420mm
(2) 510/610 with additional option
(3) By the use of 3 or 4 magazines

Work steps



Step 1

PCB is taken over from n-1 machine



Step 2

Shuttle is moving to the respective magazine. The transport conveyor is moving the PCB into the magazine.

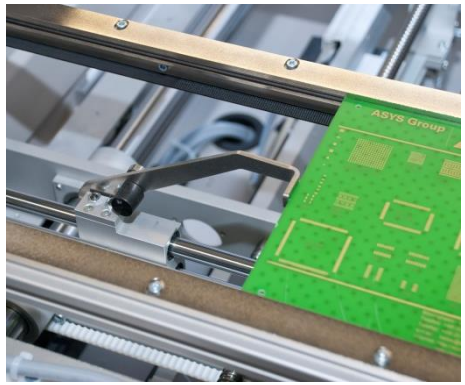

Step 3

The pusher is lifting up and pushes the PCB completely into the magazine.



Step 4

As soon as the PCB is completely in the magazine the shuttle is moving back to the takeover position.

Functionality

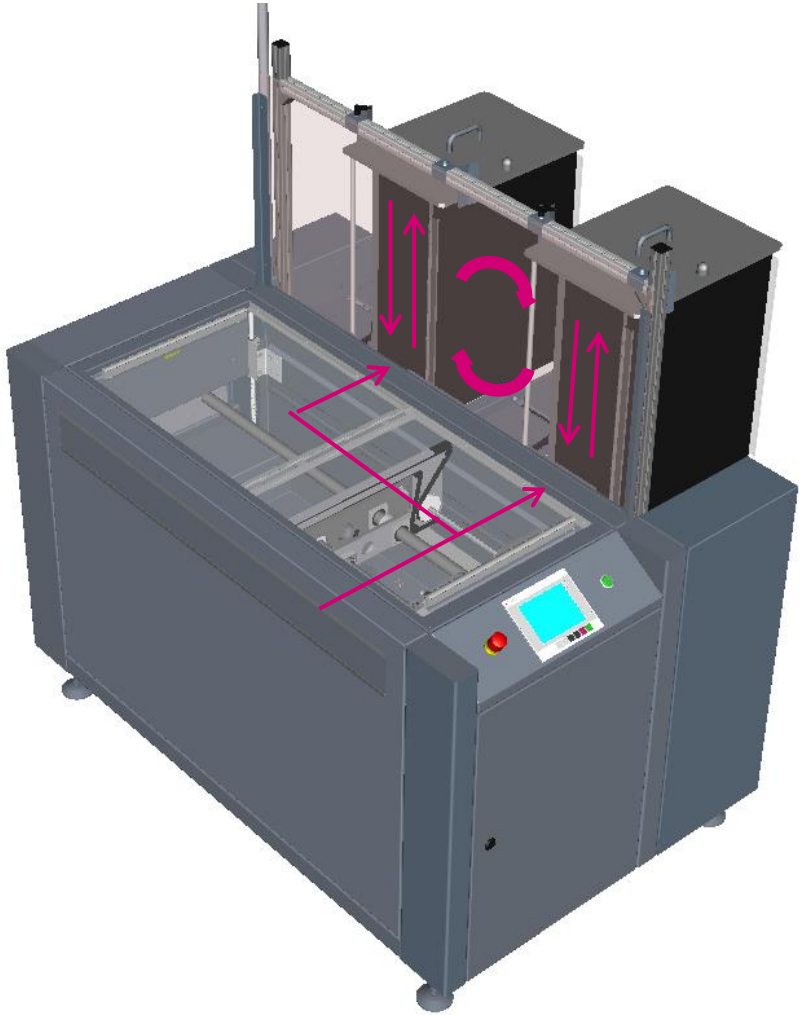

› Loading the magazines by starting either from the top, from the bottom or alternately

› Magazine positions and handover position is freely programmable

› Product memory function for 200 recipes

› Magazine memory for 5 different magazines

› Graphical color display with touch- function

› Operator guidance on 4 levels

Magazine table

› Magazine fixation on top and bottom by clamping lever, for tool-free adaption of different magazine sizes



Magazine clamp-mechanism on bottom with sensor detection.

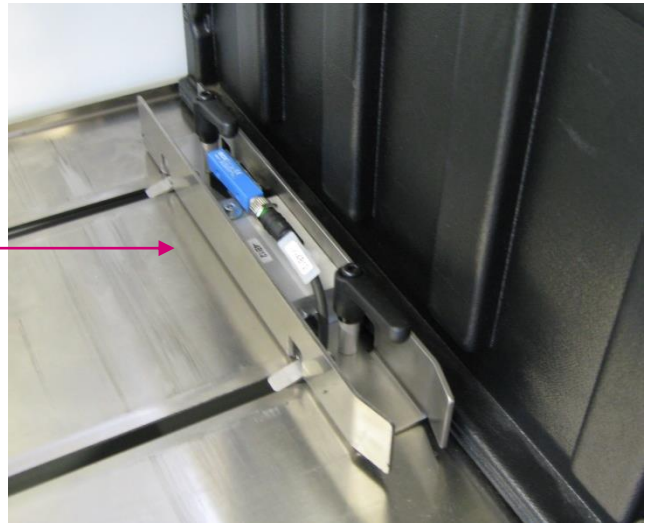

Magazine guiding on top.

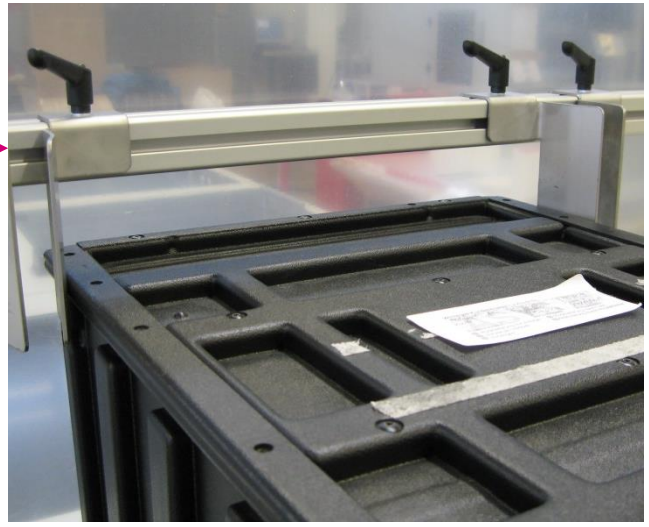

Shuttle

› Servo- Drive for fast and exact positioning

› Easy programming of the magazine- and handover positions by Teach- In

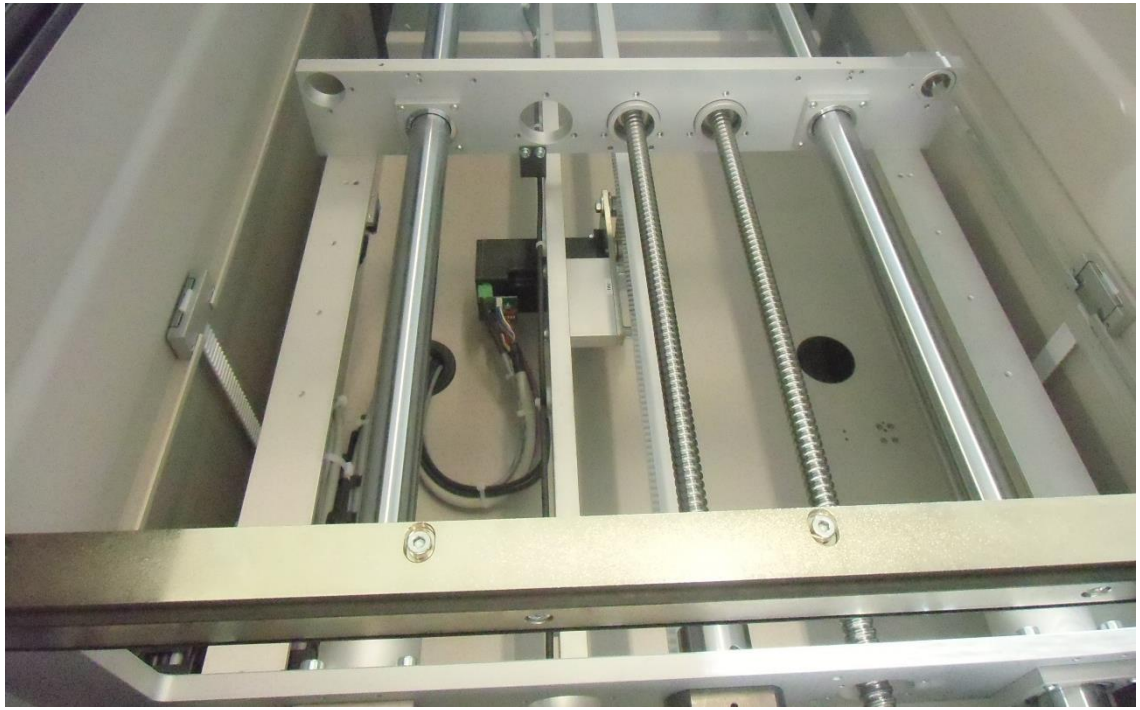

Pusher

› Motorized pusher with adjustable electronic force limiter

› Designed for component height +40/-40mm

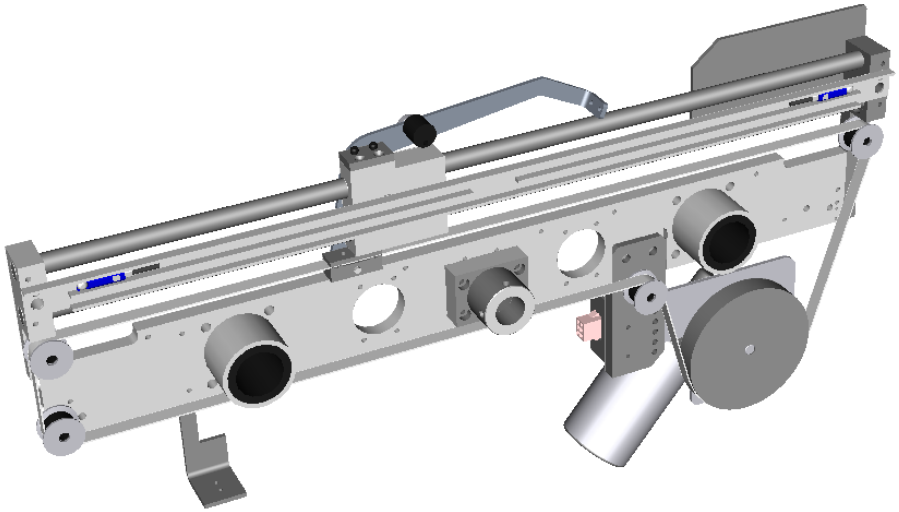

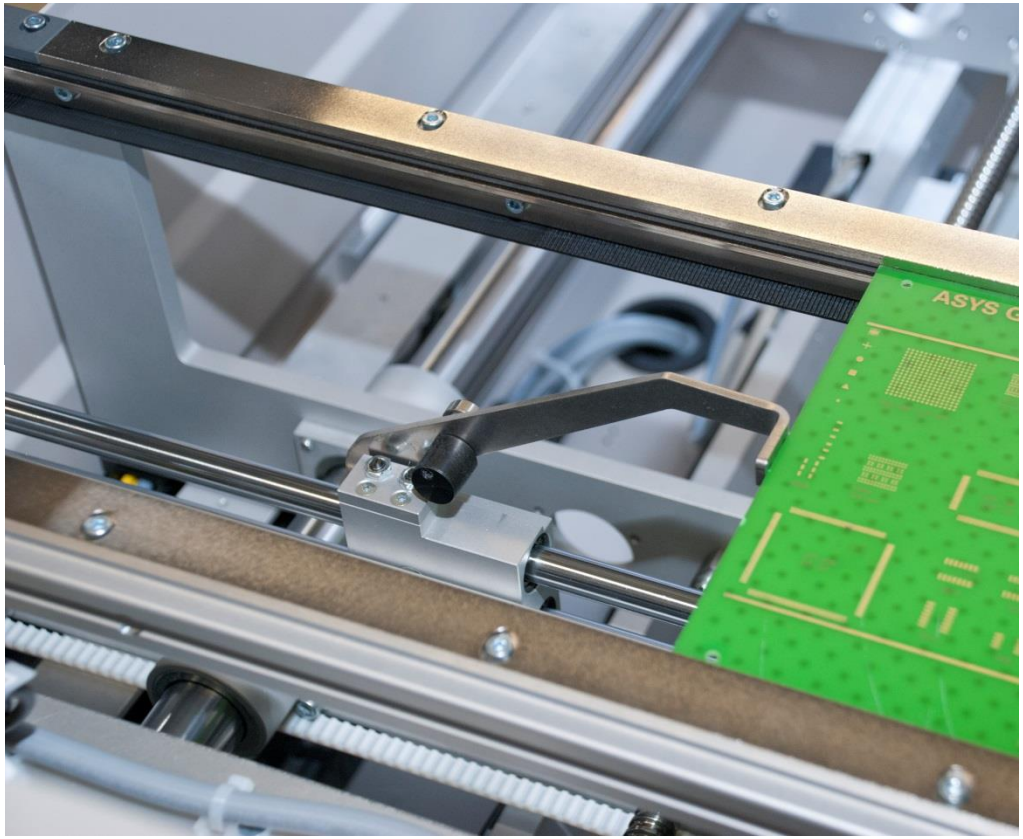

Width adjusting

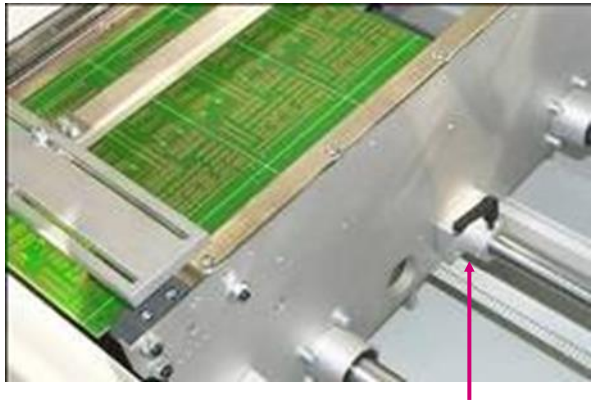

Manual adjustment of the transport width by clamping lever

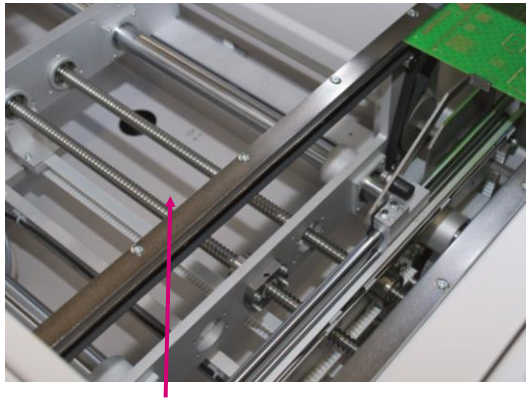

Option: Electrical width adjustment

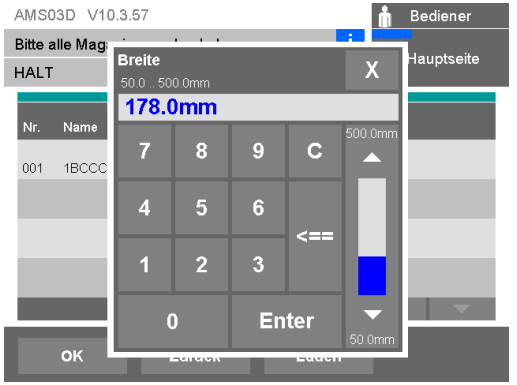

Option: Automatic with adjustment

Safety

› Emergency- stop button

› Sliding cover from both sides with contact-free safety switches (Interlock)

› Safety push- cover on lifting table with quick stop function



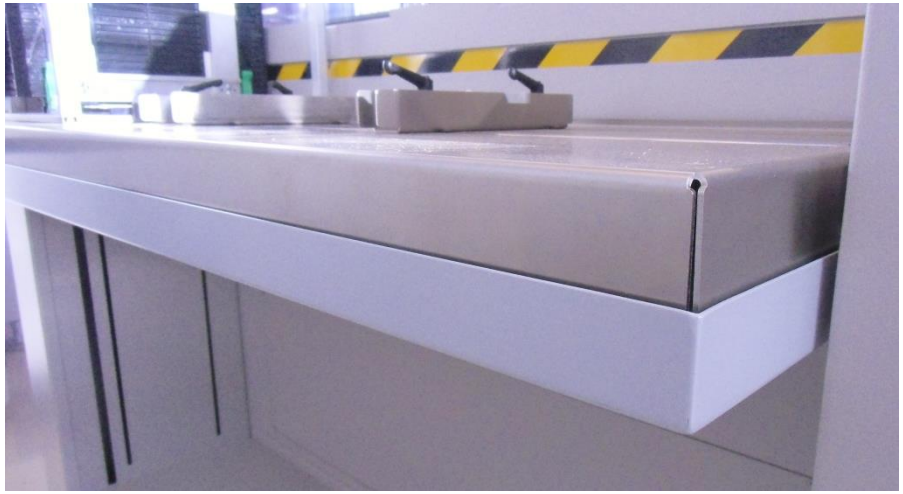

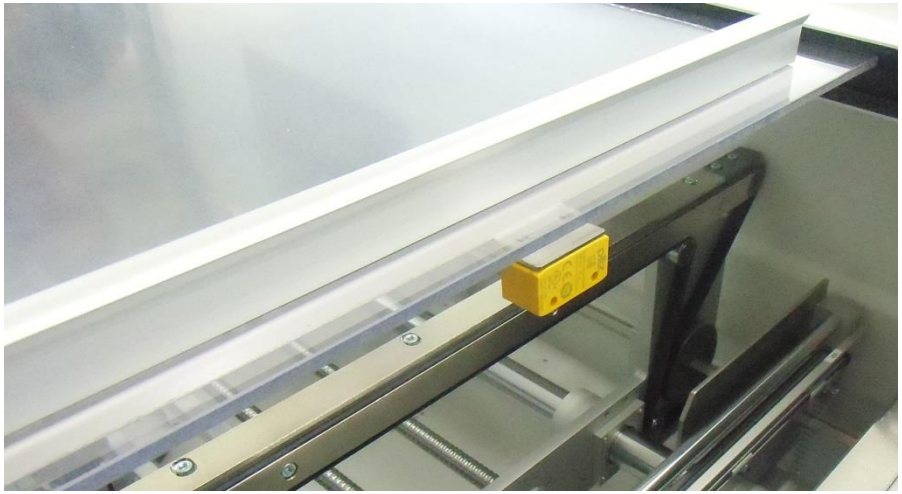

Grip- protection (shutter)



Grip- protection between magazine table and shutter closes before shuttle movement.





Grip- protection between shuttle and downline machine closes before shuttle movement.

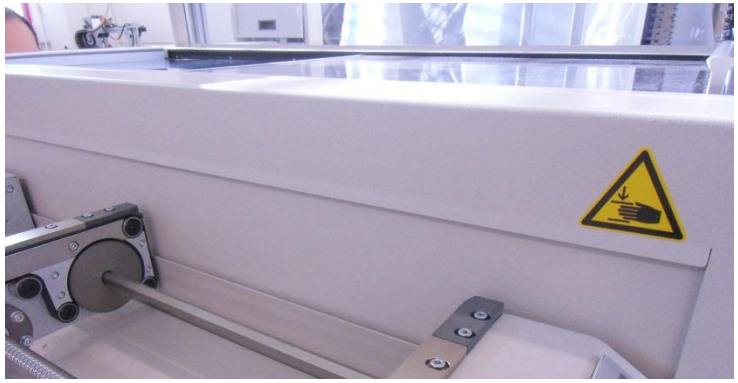

Frame

› Robust steel frame

› Completely ESD powder coated

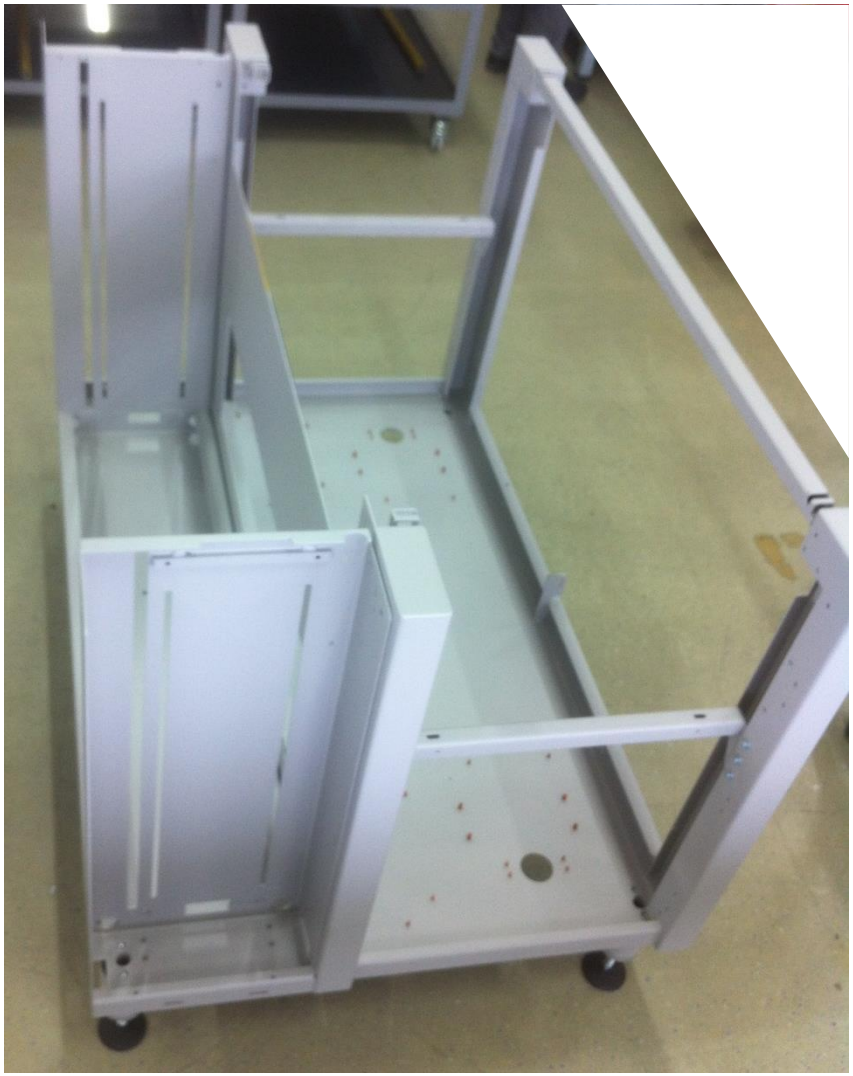

Electric

› Electrical cabinet with flap door with double-bit lock

› Main switch usable as emergency stop





Electrical cabinet

Sensing

› High- quality photoelectric proximity switch with „multiline“ light beam for safe detection of PCB’s with holes or cutouts.

› Additional sensors for “gap control” to monitor the transition gap between magazine and shuttle and between shuttle and upline machine.

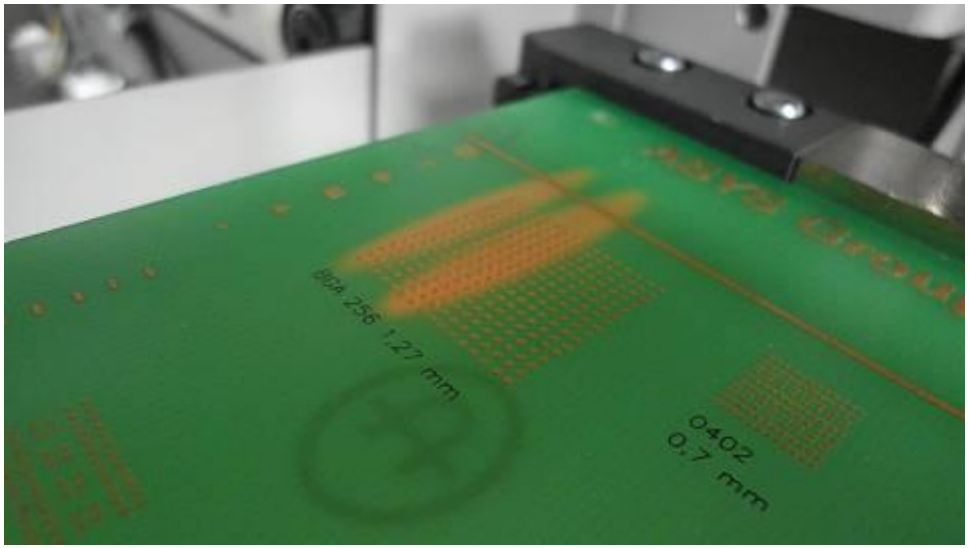

PCB detection

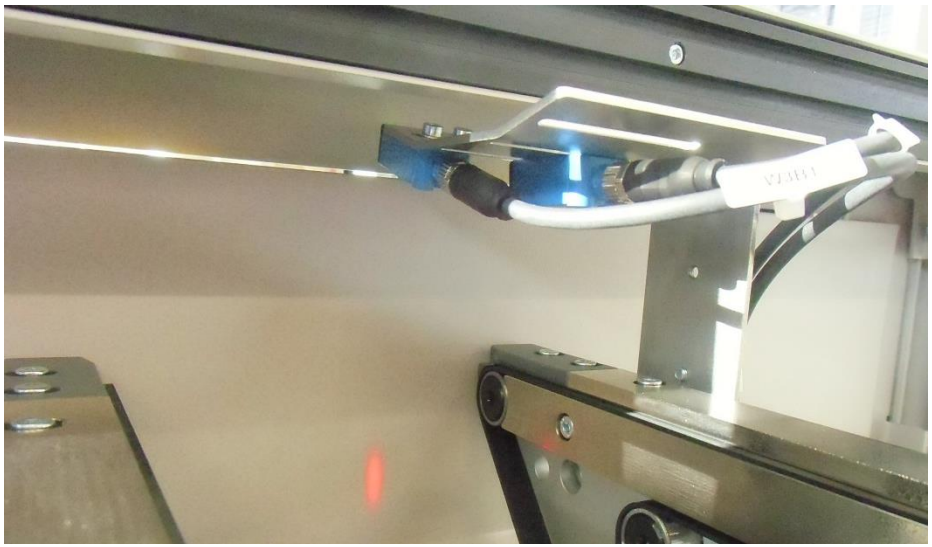

Gap control sensor

Option: Work on 3 magazines

› Usage of 3 magazines instead of 2

› Additional clamp mechanism

› Additional programmable magazine position

› Only for type 2 or XL



Type XL for 3 magazines

Option: Automatic magazine width adjustment

› The empty magazine is loading on the table and the machine automatically set-up the width of the magazine depending on the current product.



› Magazine width adjustment with pneumatic coupling to the synchronic wheel of the magazines.



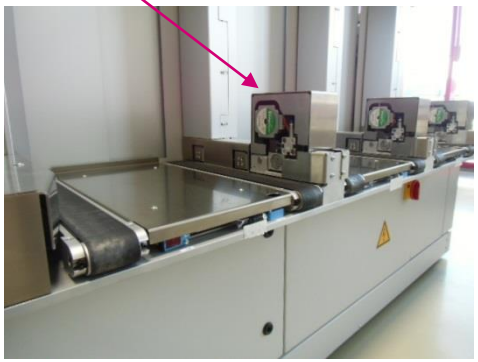

Option: Automatic magazine width adjustment

- Automatic magazine width adjustment topically only with CAB- magazines series 800 possible.
- No manual magazine set- up by the operator necessary.
- Conversion occurs through the pneumatic couple to the synchronic wheel of the magazine.

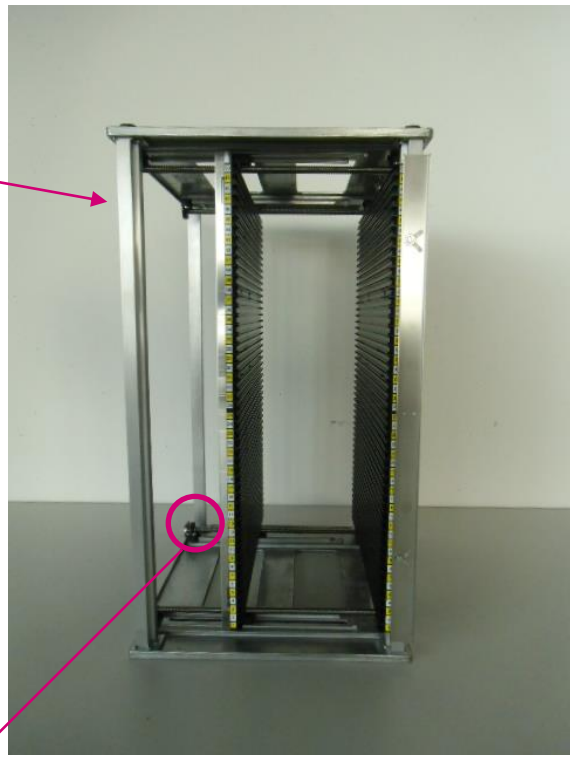

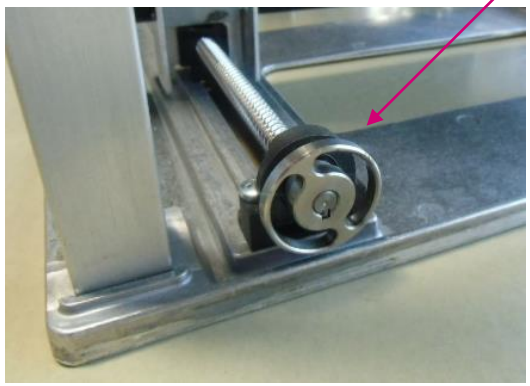

Options

› GOOD/BAD sorting function.
Software application to sort the boards in two different magazines. Decision with additional SMEMA interface signal

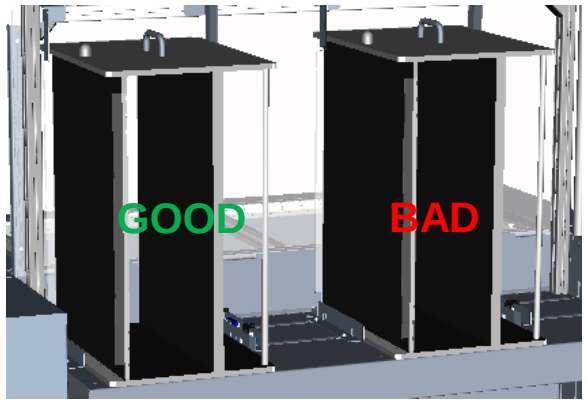

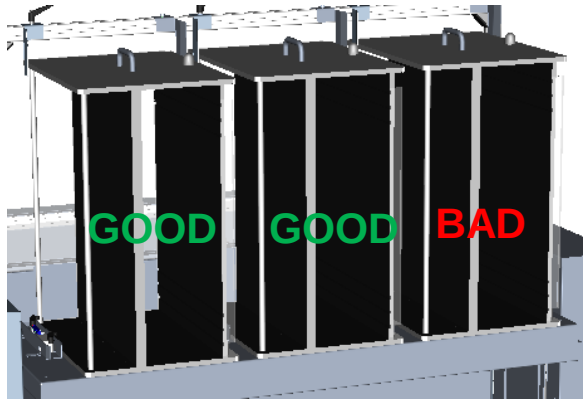

Option: 3 magazines

› Sensor for large PCB‘s
Additional sensor to monitor and enable the pusher procedure.

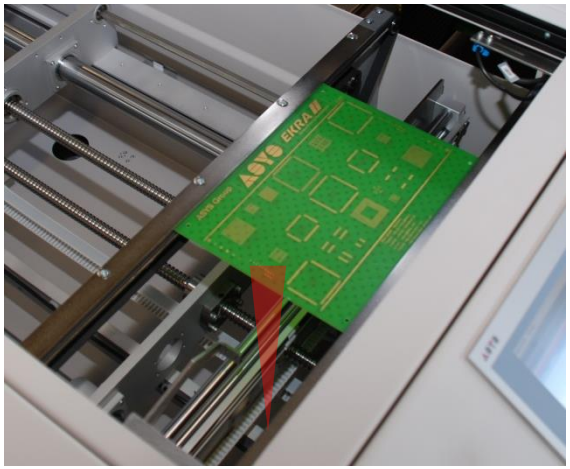

Special option for type XL

› Magazine table adaption for 12 Hybrid magazines
  › Magazine format (LxWxH): 220 x 179 x 262
  › Substrate (LxW) 6“ x 4“

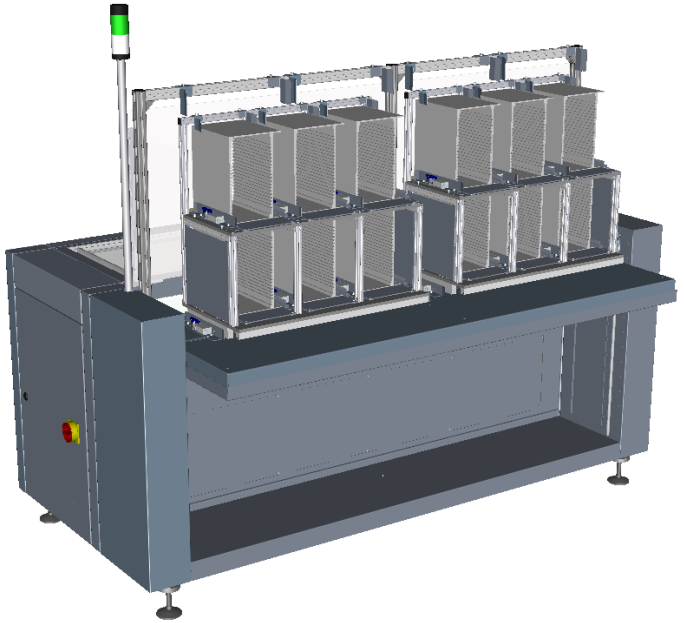

› Magazine table converted to use 4 standard magazines
  › Magazine format (LxWxH): 440 x 345 x 385
  › PCB format (LxW): 420 x 280

