Line Loader with a platform for two magazines

VEGO Dynamic

VEGO AES 03D



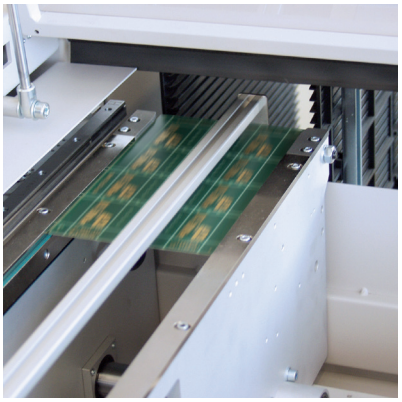

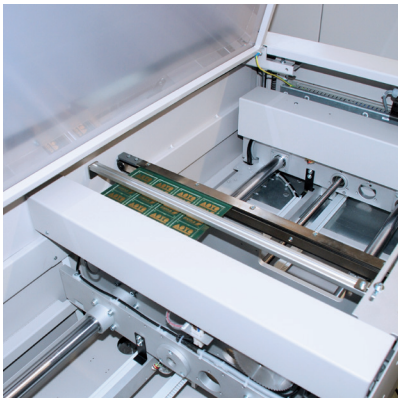

Description
The loading station AES 03D is used to automatically feed PCBs into an SMT-production line or into individual process machines e.g. stencil printers, pick and place systems, reflow ovens or test systems.

The PCBs are taken out of the magazine with an extractor mechanism and pulled onto the handover conveyor. The handover conveyor moves sideways on an integrated shuttle to the handover position and the PCB is subsequently handed over. The system is characterized by its compact and robust construction and has been designed according to the latest machine guidelines and safety standards.

The open magazine table provides easy access to the magazines. Magazine exchange during running operation ensures continuous loading. The integrated shuttle mechanism means that the system can easily switch between different magazine types and handover positions within seconds.

Features
_ Automatic switch to the second magazine
_ Transfer conveyor with integrated shuttle mechanism
_ Vertical magazine clamp
_ Simple changeover for different magazines
_ Easy machine set up due to flexible takeover position
_ Access to the magazine via the front of the machine
_ Touch Display with graphical user interface
_ Product parameters can be changed during running operation
_ Product memory function

Options
_ Magazine adaptation
_ Transport height 950mm +/- 50mm
_ Electric width adjust
_ Automatic width adjust
_ Dual lane operation
_ Flexible dual lane operation
_ Platform for 3 magazines
_ Multiple feed-out
_ Push-back mechanism
_ PCB weight up to 6kg
_ Equipment for thin PCBs (<0.5mm)
_ Extractor from below
_ Extractor with rotating tip for high components

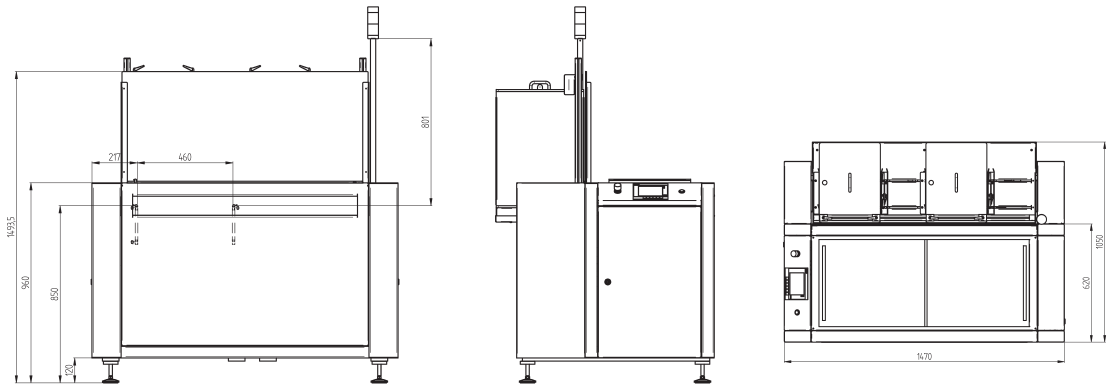

VEGO AES 03D

	Type 1	Type 2	Type 2.1	Type 3	Type 3.1
Machine Configuration					
Transport height	850 mm ± 50 mm	850 mm ± 50 mm	850 mm ± 50 mm	850 mm ± 50 mm	850 mm ± 50 mm
Max. transport width	**260 mm**	**460 mm**	**460 mm**	**690 mm**	**690 mm**
Interface	SMEMA, Siemens	SMEMA, Siemens	SMEMA, Siemens	SMEMA, Siemens	SMEMA, Siemens
Transfer direction	from left to right	from left to right	from left to right	from left to right	from left to right
Operating side	Front of the machine	Front of the machine	Front of the machine	Front of the machine	Front of the machine
Fixed rail	Front of the machine	Front of the machine	Front of the machine	Front of the machine	Front of the machine
Magazine Size					
Magazine length	420 mm	540 mm (420 mm)	540 mm	540 mm	540 mm (420 mm)
Magazine width	320 mm	530 mm	530 mm	765 mm	765 mm
Magazine heigth	568 mm	568 mm	568 mm	568 mm	568 mm
Slot spacing	4- 40 mm	4- 40 mm	4- 40 mm	4- 40 mm	4- 40 mm
Buffer spacing	1- 50 Slots	1- 50 Slots	1- 50 Slots	1- 50 Slots	1- 50 Slots
Single magazine weight	max. 30 kg	max. 30 kg	max. 30 kg	max. 30 kg	max. 30 kg
Number of magazines	2	2 [a]	2	2 [b] [c]	2 [b] [c]
Panel Dimensions					
Panel length	70 to 420 mm	70 to 510 mm [d]	70 to 660 mm [d]	70 to 510 mm [d]	70 to 660 mm [d]
Panel width	50 to 260 mm	50 to 460 mm	50 to 460 mm	50 to 690 mm	50 to 690 mm
Panel thickness	0.5 to 4.5 mm	0.5 to 4.5 mm	0.5 to 4.5 mm	0.5 to 4.5 mm	0.5 to 4.5 mm
Component clearance	+ 12,5 mm [e]/-40 mm	+ 12,5 mm [e]/-40 mm	+ 12,5 mm [e]/-40 mm	+ 12,5 mm [e]/-40 mm	+ 12,5 mm [e]/-40 mm
Panel weight	to 3 kg	to 3 kg	to 3 kg	to 3 kg	to 3 kg
Installation Requirements					
Power supply	230 V / 115 V, 50 / 60 Hz, ± 10%	230 V / 115 V, 50 / 60 Hz, ± 10%	230 V / 115 V, 50 / 60 Hz, ± 10%	230 V / 115 V, 50 / 60 Hz, ± 10%	230 V / 115 V, 50 / 60 Hz, ± 10%
Power supply system	L1 + N + PE	L1 + N + PE	L1 + N + PE	L1 + N + PE	L1 + N + PE
Power consumption	0,5 kW	0,5 kW	0,5 kW	0,5 kW	0,5 kW
Machine Description					
Length x Width x Height [f]	1050x1060x1500 mm	1170x1470x1500 mm	1320x1470x1500 mm	1170x2040x1500 mm	1170x2040x1500 mm
Netto weight	300 kg	400 kg	450 kg	500 kg	570 kg
Noise Level	< 75 dB	< 75 dB	< 75 dB	< 75 dB	< 75 dB

Upgrades
Machine networking via IC Net

a) Optional 3 magazines, Magazine width 320 mm
b) Optional 3 magazines, Magazine width 530 mm
c) Optional 4 magazines, Magazine width 320 mm Single magazine weight max. 20 kg.
d) Depending on extractor type
e) Optional + 25 mm; others on request
f) Other dimensions on request

ASYS GROUP

ASYS Automatisierungssysteme GmbH
Benzstrasse 10,
89160 Dornstadt, Germany
Tel (+49) 7348 9855 0
Fax (+49) 7348 9855 91
info@asys.de

For more information visit
www.asys-group.com

Subject to change without notice.
Some general descriptions and performance characteristics may not be applicable to all products. Technical specifications are subject to change without notice. Only features and technical data provided in purchasing contract are legally binding.

Printed in Germany